BALKE

BALKE 100 B2C COAL COAL GR P 520 BPI CL1 PY MR P1
Hook lamp

Description

- BALKE Hook lamp
- Color: COAL (RAL 7021)
- Housing: borosilicate-glass diffuser for inside/outside use
- End caps : Stainless steel 316L painted COAL (RAL 7021)
- Anodised aluminium reflector : PETROL
- With flux-breaker grid lacquered COAL (RAL 7021)
- External metal parts in 316L stainless steel and screws in A4 stainless steel
- Pendant handle and hook : COAL (RAL 7021) powder-coated aluminium with anti-corrosion treatment
- Gaskets: Gaskets moulded in EPDM

Light specifications and controlling

- Lamps: 2 matt E14 LED filament lamps (4W 2700K)
- Dimming: Built-in dimming button

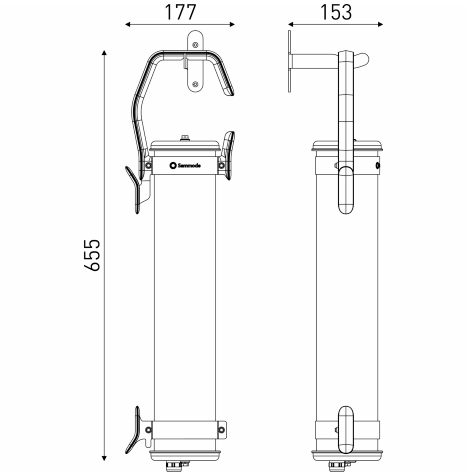

Installation and maintenance

- Dimensions: 655 x 177 x 123 mm
- Provided with 4m 5G1,5 cable with tinned copper meshwork under transparent tubing with a european plug IP44

Characteristics

- Warranty : 5 years
- Operating temperature: -20°C to +30°C
- Protection: IP68
- Resistance to IK shocks: IK07
- Electrical class: Class I
- Power supply: 220-240 V 50/60 Hz
- Power consumption: 8 W
- T°C with incandescent wires: non-flammable
- Weight: 4,5 kg

© Sammode – 21 dec. 2021 - Technical specifications subject to change